Analysis Concerning the Usage of Visible Light Communications in Automotive Applications: Achievable Distances vs. Optical Noise

Sebastian-Andrei Avătămăniței[1,2], Alin-Mihai Căilean[1,2,†], Cătălin Beguni[1,2], Mihai Dimian[1,2] and Valentin Popa[1]
[1]Department of Computers, Electronics and Automation, Stefan cel Mare University of Suceava, 720229 Suceava, Romania
[2]Integrated Center for research, development and innovation in Advanced Materials, Nanotechnologies, and Distributed Systems for fabrication and control, Stefan cel Mare University of Suceava, Suceava, Romania
[†]alinc@eed.usv.ro

***Abstract*—Considering the wide deployment of LED lighting sources in the transportation domain, automotive Visible Light Communications arise as a highly promising research area. Nevertheless, due to the high intensity of parasitic light sources associated to rather low power data signals numerous challenges emerge. In this context, this paper is focused on the analysis of linear transimpedance circuit performances in automotive applications. Thus, it presents an analysis regarding the influence of strong sunlight on the photosensitive element. The analysis involves the simulation of a microcontroller-assisted variable gain transimpedance circuit that enables the VLC system to prevent saturation by reducing its sensitivity. By considering the emitted irradiance of lighting systems existing in transportation infrastructure, the maximum communication distance is determined. The results show that a variable gain transimpedance circuit can enable communication distances between 9 and more than 150 meters depending on the sunlight power and on the VLC receiver field of view.**

Keywords—automotive applications; optical communications; optical noise; transimpedance circuit; visible light communication.

I. INTRODUCTION

Visible Light Commutations (VLC) are an evolving wireless communication technology that uses the visible light spectrum (380-780 nm) for simultaneous illumination and data transmission [1]. VLC is a relatively new technology, whose development began in the early 2000s [2], [3]. Initially, the progress in the VLC area was rather slow due to the limited number of research groups being involved in its development. Starting with 2006, several VLC prototypes began being revealed, and from that point, the performances of the VLC technology in terms of achievable data rates had grown almost exponentially. Thus, current VLC systems are able to provide data rates up to a few tens of Gb/s [4]. So, although VLC had a relatively slow start, it seems that the technology is beginning to develop very fast in the last few years, and based on this high potential, it is being considered for usage in future 5G/6G applications [5].

In addition of having an extraordinary potential in high data rate indoor applications, the wide integration of LED devices in vehicle lighting systems and as part of the transportation infrastructure (i.e. street lighting system, traffic lights, traffic panels, etc.) makes the usage of VLC in vehicular applications to seem straightforward [6]. Thus, the VLC technology can contribute to the improvement of road safety together with other state-of-the-art equipment [7]-[9]. In this scenario, VLC appear suitable for traffic Infrastructure-to-Vehicle (I2V) [10], [11] and Vehicle-to-Vehicle (V2V) [12] communications or even inter-vehicle distance determination [13]. Nevertheless, even if in recent years performances of automotive VLC systems significantly improved, numerous issues still have to be addressed in order to enable the technology to support all requirements imposed by the usage in vehicular applications [6]. Thus, meteorological phenomena [14], strong parasitic light sources [15], vehicle mobility [16] and limited power data signals [17] influence the communication performances, affecting in turn reliability, communication range, mobility, bit error ratio (BER) and packet delivery ratio (PDR). Thus, existing studies forecast that automotive VLC systems will be used in conjunction with RF-based systems [18]-[20].

In this context, this paper focuses on the concerns associated with the influence of sunlight on the performances of a transimpedance circuit. Thus, based on several simulation setups, this paper analyses the achievable communication distances under different parasitic light conditions. These simulations consider the sunlight intensity, the sun orientation with respect to the VLC receiver and the influence of the VLC receiver Field Of View (FOV).

II. CONSIDERATIONS ON THE DESIGN OF A VLC SYSTEM: EMPHASIZING THE TRANSIMPEDANCE CIRCUIT SIGNIFICANCE

A VLC system consists of a VLC emitter and a VLC receiver separated by the VLC channel. For the VLC emitter, the data transmission ability is considered as a secondary function, complementary to the main lighting and/or signaling function [17]. Thus, the parameters of the VLC emitter are mostly dependent on lighting requirements and less dependent on VLC necessities. So, unlike in RF-based technologies, the VLC emitter optical power is determined by the device's primary use case. Additionally, the VLC emitter must not generate perceivable flickering, whereas in some cases, the VLC emitter should also be able to support light dimming [21]. The VLC emitter also influences the communication parameters in terms of achievable data rate, based on the LED

This work was supported by a grant of the Romanian Ministry of Research and Innovation, CCCDI - UEFISCDI, project number PN-III-P1-1.2-PCCDI-2017-0917, contract 21 PCCDI/2018, within PNCDI III.

978-1-7281-6870-8/20/$31.00 ©2020 IEEE

device switching time. Nevertheless, low power direct emission special purpose LEDs can achieve extremely low switching times than can go down to 1ns. On the other hand, general-purpose high power LEDs, like the ones used in vehicle lighting systems, street lighting or traffic lights have higher capacities and can usually achieve switching times of around 1µs. Anyway, even if the VLC emitter influences the overall communication performances, in automotive applications, these performances are mainly determined by the design of the VLC receiver.

A general structure of a VLC receiver is presented in Fig. 1. As emphasized here, a reversed biased PIN photodiode connected in a transimpedance circuit represents the main option to transform the optical carrier into an electrical signal that contains the data. The photodiode generates an electrical current proportional to the incident light. This current is processed by the transimpedance circuit and transformed into a voltage which is filtered, amplified and digitized in order to recover the information. The usage of the transimpedance solution is recommended as it provides a reasonable balance concerning gain-bandwidth product (GBP) and noise. Nevertheless, as illustrated in Fig. 2, the utilization of VLC in vehicular applications is highly challenging due to the low power incoming data signals associated with middle range distances. Furthermore, the outdoor VLC channel becomes even more challenging because of high power parasitic signals produced by other sources of light (i.e. natural and artificial). Thus, the irradiance of the incoming information signal can drop to tens of nW/cm^2 levels, whereas direct sun irradiance can reach up to 100,000 µW/cm^2. In such circumstances, the sunlight introduces a strong DC component, whereas in some cases, it can even saturate the transimpedance circuit and block the communication. Thus, designing an adequate transimpedance solution becomes very challenging as this operation imposes a tradeoff between resilience to noise and communication range, influencing in turn the overall VLC receiver performances. In this context, a logarithmic transimpedance solution is proposed in [11] as an alternative to the linear approach. This solution significantly diminishes the likelihood of saturation and expands the circuit active range. With the exception of this study and a few others, most VLC receivers are based on the classical linear transimpedance solution pointing out the importance of such designs.

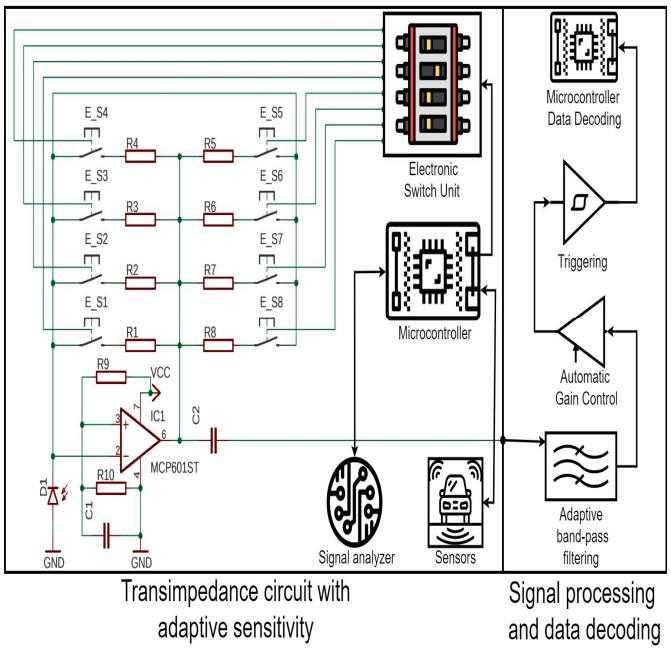

Fig. 1. Schematic of the adjustable transimpedance circuit VLC receiver.

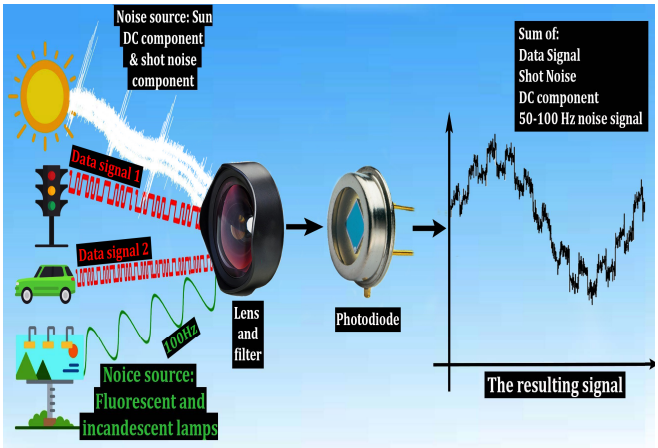

Fig. 2. Schematic illustration of the additive characteristic of optical noise sources in photodiode-based VLC receivers. One can see that the photodiode sums up all incident light sources.

III. Analysis of the Transimpedance Solutions Performances in Outdoor Applications

In the above described context, this section aims to analyze the limits of a linear transimpedance solution concerning the usage in automotive applications. Thus, it aims to provide an analysis of the fundamental limits in variable V2V/I2V distances and variable FOV, considering different sunlight intensities and sun orientations. Thus, the purpose is to provide a VLC distance estimation as a function of the outdoor lighting conditions and of the VLC receiver FOV.

A. Simulation Scenario

The simulation procedure aims to consider several scenarios, starting from an ideal VLC channel with no sunlight and moving toward a worst-case scenario with strong sunlight directly incident on the VLC receiver. Thus, the simulation scenario is provided in Table I and illustrated in Fig. 3. It assumes an on-vehicle mounted VLC receiver approaching the VLC emitter (I2V or V2V). To evaluate the effect of lighting conditions on the VLC communication distance, the parasitic light power is gradually increased, whereas the incidence angle is modified in order to simulate the effect of the sun from sunrise to sunset. To evaluate the influence of sunlight on an outdoor VLC receiver performances, an adjustable sensitivity transimpedance circuit has been simulated (Fig. 1) and its output current has been investigated for the scenarios summarized in Table I.

A solution to prevent transimpedance circuit saturation in strong sunlight is provided in [22]. Here, the sensitivity of the transimpedance circuit has been limited with the purpose of reducing the effect of background light. On the downside, the

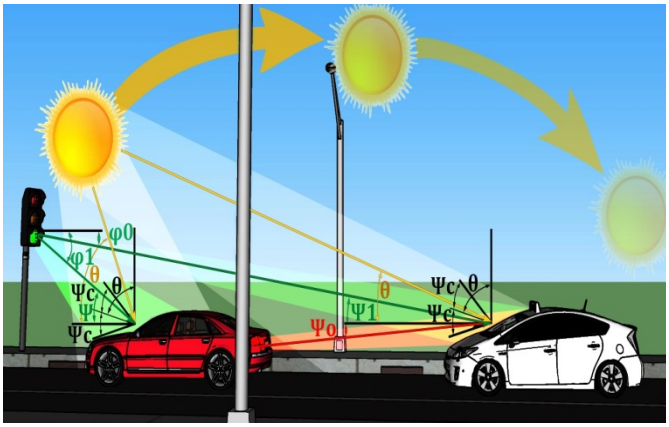

Fig. 3. Representation of the intended evaluation scenario: while receiving data from the VLC emitter, the VLC receiver is more or less influenced by the sun. This influence is the highest when the θ angle is smaller, whereas as θ increases, the VLC receiver makes the transition from direct sunlight to diffuse sunlight conditions ($\theta > \psi_c$).

communication range has been reduced to 10 – 14 meters. Reference [23] provides a detailed analysis concerning some of the existing automotive VLC systems and demonstrates that in many cases, in order to enhance a specific ability of the system (e.g. noise resilience, communication distance, etc.), automotive VLC developers sacrifice a different ability (e.g. communication range, mobility, data rate). Often, this sacrifice is made while considering a worst-case scenario, and thus, this tradeoff can be rather unbalanced. This points out that the balance between different features should be made based on a previous context analysis (e.g. the sensibility of the transimpedance circuit should be adapted based on background light intensity, location of the optical noise source, etc.). So, based on the experience of [22] and considering the arguments from [23], one can see that a static sensibility transimpedance solution is either too sensitive to parasitic light, leading to saturation, or it is too insensitive, leading to reduced communication distances. Thus, context-adaptive VLC systems can have improved performances as they enable a maximization of the performances as a function of the context [23]. So, instead of analyzing a fixed amplification circuit, variable amplification is considered instead, as illustrated in Fig. 1. Table II presents the assumed hardware settings for the simulations.

TABLE I. OUTDOOR VLC CHANNEL AS A FUNCTION OF THE PARASITIC LIGHT

VLC channel	Characteristics
Ideal VLC channel	Dark conditions with no parasitic light sources: this scenario is used to determine the maximum communication distance in ideal conditions
Diffuse light conditions	This scenario assumes variable parasitic daylight without implying direct sunlight exposure
Worst case scenario	This scenario tests the resilience to noise of the VLC receiver. It assumes direct sunlight incident on the VLC receiver. In most cases, such circumstances lead to communication blockage due to transimpedance circuit saturation.
Real life daytime scenario	The real life scenario assumes that the VLC receiver is constantly exposed to diffuse light conditions, whereas occasionally (e.g. sunrise, sunset, when climbing a slope) it is also exposed to direct sunlight.

TABLE II. SIMULATION PARAMETERS

Photodiode Type	BPX 61
Photodiode FOV ($\psi_{C_{pd}}$)	±55°
Photodiode Sensitive Area	7.02 mm^2
Photodiode Photocurrent	70 nA/lux
Photodiode Switching Time	20 ns
VLC emitter illuminance at 1 m	300 lux
Parasitic light illuminance	0 – 10,000 lux
Operational Amplifier Supply Voltage	5V
Bias Voltage Non-inverting Input	4.9V
R_{load}	Variable between 4kohm and 3.9Mohm

B. Simulation Model

In a transimpedance circuit, the output voltage is given by eq. 1, which shows that the sensitivity of the circuit and the saturation limit are directly dependent on R_{load}.

$$V_{out} = R_{load} \cdot I_p \tag{1}$$

where V_{out} is the amplitude of the output signal and I_p is the photocurrent which is given by eq. 2.

$$I_p = S_\lambda \cdot P_{optical} \tag{2}$$

where S_λ is the photodiode's spectral sensitivity and $P_{optical}$ represents the optical power incident on the photosensitive surface as expressed in eq. 3.

$$P_{optical} = P_{signal} + P_{noise} \tag{3}$$

where P_{signal} is the optical power of the incident data signal and P_{noise} is the incident optical noise power which is given by eq. 4. Thus, as suggested in eq. 3 and illustrated in Fig. 2 and Fig. 3, the generated photocurrent is dependent on the total incident light.

$$P_{noise} = P_{direct} + P_{diffuse} \tag{4}$$

where $P_{diffuse}$ is the optical power of the incident diffuse light introduced by the indirect daylight, whereas P_{direct} is the optical power of the incident direct sunlight as expressed in eq. 5.

$$P_{direct} = P_{sun} \cdot \cos(\theta) \tag{5}$$

where P_{sun} is the optical power of the sunlight and θ is the sunlight incidence angle, given by eq. 6. So, this relation shows that the sun impact is influenced by the incidence angle. Thus, the sun has the highest impact when the incident angle on the photodiode is close to 0°, which can occur at sunrise and sunset. Nevertheless, the sunlight power during sunrise and sunset is significantly lower (i.e. up to 20,000 μW/cm^2) compared to the sun's full power during midday (i.e. more than 100,000 μW/cm^2).

$$\theta = \begin{Bmatrix} \theta_{sun}, \theta_{sun} < \psi_C \\ 90°, \theta_{sun} \geq \psi_C \end{Bmatrix}, \quad (6)$$

where θ_{sun} is the sun incidence angle with respect to the VLC receiver horizontal position and ψ_C is the VLC receiver reception angle (i.e. FOV).

The incident diffuse light is significantly influenced by the VLC receiver FOV, as suggested by eq. 7.

$$P_{diffuse} = P_{indirect\_light} \frac{\tan(\psi_C)^2}{\tan(\psi_{C\_pd})^2} \quad (7)$$

where ψ_{C_pd} is the maximum FOV of the photodiode. Thus, when no optical collecting system is used for the FOV limitation ψ_C is equal with ψ_{C_pd}.

The transimpedance circuit introduces a signal-independent thermal noise component which is given by eq. 8.

$$N_{thermal} = \frac{4KTBN_{circuit}}{R_{Gain}} \quad (8)$$

where K is Boltzmann's constant, T is the temperature, B is the detector bandwidth.

In daytime conditions, the receiver incident light contains mostly background light. The parasitic light generates a strong shot noise component, significantly affecting the Signal to Noise Ratio (SNR). The quantity of shot noise introduced by the background light is given by eq. 9.

$$N_{shot} = 2q \cdot I_p \cdot B \quad (9)$$

where q is the electron charge.

Equation 9 points out that the quantity of induced shot noise is proportional to the amount of incident light but also with the transimpedance circuit's bandwidth B. So, the bandwidth B is given by eq. 10.

$$BW = \sqrt{\frac{GBP}{2\pi R_{gain}(C_P + C)}} \quad (10)$$

where GBP is the gain-bandwidth product of the operational amplifier, C_P is the photodetector capacitance and C is the amplifier capacitance.

Thus, the SNR is finally given by eq. 11.

$$SNR = \frac{(RP_{signal})^2}{2qRP_{signal}B + 2qRP_{noise}B + \frac{4KTBN_{circuit}}{R_{gain}}} \quad (11)$$

C. Simulations Results Concerning the VLC Usage in Vehicular Applications

Automotive VLC require high resilience to optical noise and variable communication distances. As the vehicular environment is characterized as highly dynamic, the inter-vehicle distance can vary between a few meters and several tens of meters or even more. Based on previous experience [10], [11], it was observed that a VLC receiver can process and decode the output of a transimpedance circuit as long as its amplitude is higher than 1-3 mV. For lower amplitude levels, the SNR is too low and the data becomes difficult to be decoded using standard signal processing techniques. Based on this observation and considering the optical power emitted by a standard compliant LED traffic light, the maximum communication distance has been determined for several R_{load} values, while assuming that no other sources of light are present. These results are presented in Table III. Nevertheless, high sensitivity to optical data signals is also equivalent to high sensitivity to photoelement saturation (according with eq. 1-3). In such circumstances, the transimpedance circuit output voltage reaches the maximum value and it cannot detect light intensity variations any more. Thus, a necessary step is to also determine the transimpedance circuit saturation limit considering a wide FOV VLC receiver (±55˚). For this scenario, the illuminance of diffuse sunlight is gradually increased while monitoring the circuit output voltage. One can see in Fig. 4 that a variable R_{load} enables the transimpedance circuit to support parasitic light values that go up to 10,000 lux. As it is well-know, the illuminance of the sun can get up to 100,000 lux. Nevertheless, as an on-vehicle V2V/I2V VLC receiver has a horizontal orientation, it is very unlikely for it to experience 100,000 lux levels. Moreover, as demonstrated in [24], the influence of solar irradiance can be significantly reduced by means of optical filtering and so, the 10,000 lux limit is representative for outdoor applications.

TABLE III. SUMMARY OF THE SIMULATION RESULTS CONCERNING THE TRANSIMPEDANCE CIRCUIT COMMUNICATION AND SATURATION LIMITS IN DIFFERENT CONDITIONS

Gain resistor value [kΩ]	**Achievable communication distance in dark conditions[m]**	**Transimpedance circuit saturation limit in diffuse light conditions [lux]**			
		±55˚ FOV	±30˚ FOV	±15˚ FOV	±7.5˚ FOV
3,9	9	17949	X	X	X
12	15	5838	X	X	X
39	28	1800	10986	X	X
120	50	588	3573	16582	X
390	90	183	1104	5105	21153
1200	158	64	360	1663	6877
3900	286	21	114	514	2118

In automotive VLC applications, long-range communication generates small emitter – receiver angles, and thus, an optical collecting system narrowing the VLC receiver FOV becomes an effective solution to prevent saturation and to enhance the SNR. The narrow FOV eliminates part of the optical noise coming from the sides, preventing it to reach the photosensitive element. Basically, the modification of the FOV modifies the light collection area, enhancing the SNR but limiting the mobility. Fig. 5 illustrates how different FOVs influence the VLC receiver saturation limit (considering diffuse sunlight conditions).

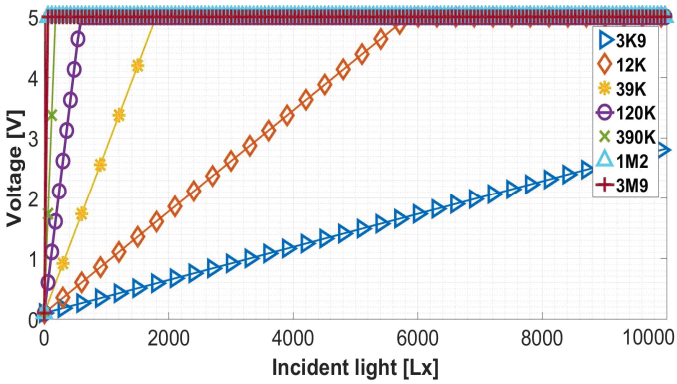

Fig.4. Simulation results showing the evaluation of a linear transimpedance circuit having variable noise resilience. The results show the variable saturation limits when a wide FOV (±55˚) is considered.

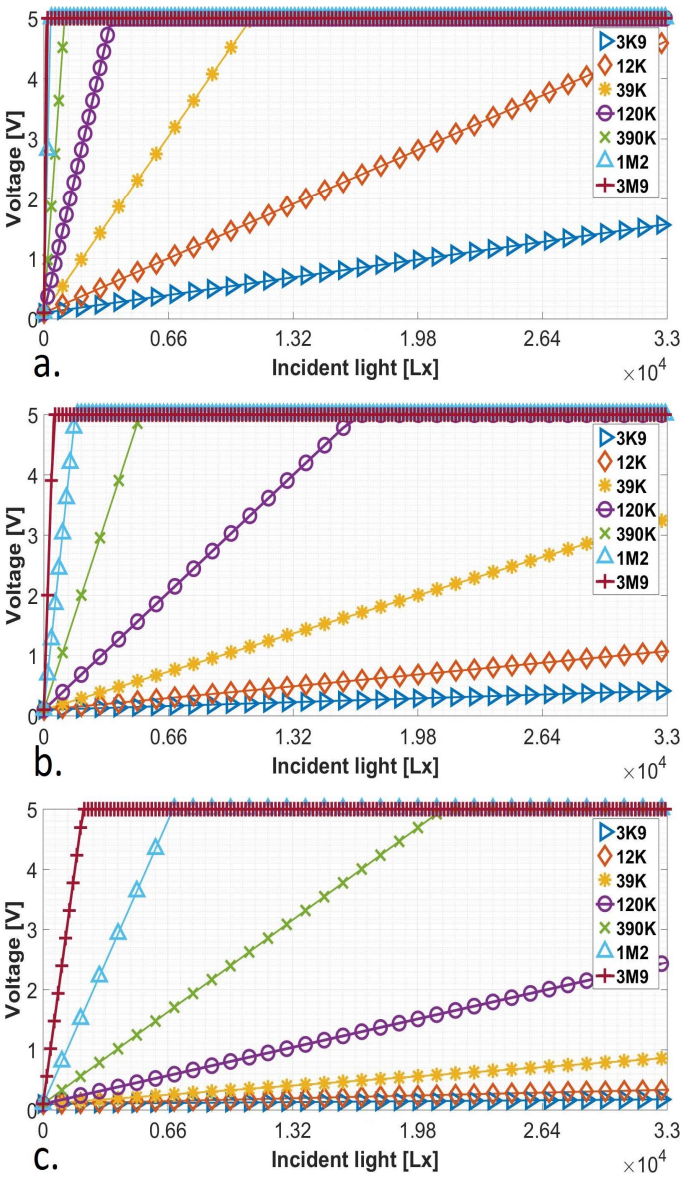

Fig.5. Simulation results showing the effect of the FOV decrease: a). ±30˚ FOV; b). ±15˚ FOV; c). ±7.5˚ FOV. One can see that as the FOV decreases the saturation limit increases due to the fact that in such cases only a fraction of the diffuse light reaches the photosensitive surface.

For the final simulation scenario, direct sunlight is considered. This situation envisions that during sunrise for example, the sun can directly face the VLC receiver while the θ incidence angle is smaller than the receiver FOV (i.e. ψ_c in Fig. 3). During this time, the effect on VLC performances is highly severe as it generates a strong shot noise component. Thus, in addition to a possible saturation of the VLC receiver, significant reductions of the communication range, the strong shot noise component significantly affects the SNR and so, the BER. The effect of the sunlight incidence angle for several FOV values is illustrated in Fig. 6. It should be mentioned here that in the real-life scenario, the VLC receiver will also be exposed to a diffuse light component in addition to the dominant direct sunlight component. The summary of these simulation results is provided in Table III.

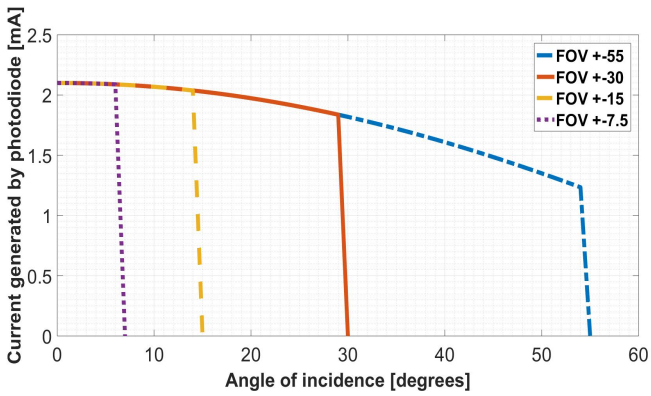

Fig.6. Simulation results showing the effect of the direct sun as the incident angle is increasing (sun rises).

D. *Final Discussion on the Results*

Linear transimpedance circuits are widely used in automotive VLC applications. Such circuits have intrinsic limitations if used using a single amplification configuration. Nevertheless, based on the context-adaptive concept [23] variable amplification can be used instead. This approach provides an optimal tradeoff between sensibility and noise resilience. This paper has analyzed the performances of such a circuit in terms of resilience to noise and achievable communication range. The simulation results have shown that communication distances between 9 and more than 150 meters could be achieved. The results also showed that when short communication distances are envisioned (i.e. 9 m), such a circuit can provide enhanced noise resilience. Thus, instead of using a fixed gain of the transimpedance circuit, a microcontroller-assisted gain approach seems more suitable. In this case, the resilience to noise vs. communication range tradeoff can be optimally established based on optical noise measurement. The results also indicate that when the VLC receiver is exposed to strong parasitic light, the communication distance is reduced, as the noise collecting surface increases. Nevertheless, a wide FOV configuration assumes communication with a nearby vehicle. In case there is no nearby vehicle, the FOV can be narrowed and thus, the communication distance can be increased. So, this study confirms the fact that context-adaptive behavior can considerably expand the performances of automotive VLC

systems, enabling their usage in inter-vehicle communication applications.

IV. CONCLUSIONS

This paper provided the results of an analytical evaluation based on simulations concerning the utilization of the VLC technology in automotive applications. Thus, the paper was focused on the influence of parasitic light on VLC performances. The simulation results showed that communication distances above 150 meters can be achieved in the absence of parasitic light sources. Nevertheless, as the parasitic light power increases, the sensitivity of the circuit must be reduced in order to avoid the transimpedance circuit saturation. So, in strong lighting conditions, the communication distance can be reduced to approximately 50 meters if a narrow FOV receiver is used or to only 9 meters if wide FOV receivers are used. The results confirm the fact that a microcontroller-assisted transimpedance circuit provides enhanced flexibility and improved overall performances. Future work on this topic involves the hardware implementation and experimental evaluation of the adaptive gain transimpedance circuit in automotive VLC applications.

REFERENCES

[1] L. E. M. Matheus, A. B. Vieira, L. F. M. Vieira, M. A. M. Vieira and O. Gnawali, "Visible Light Communication: Concepts, Applications and Challenges," in *IEEE Communications Surveys & Tutorials*, vol. 21, no. 4, pp. 3204-3237, Fourthquarter 2019. doi: 10.1109/COMST.2019.2913348

[2] G. Pang, T. Kwan, Chi-Ho Chan and Hugh Liu, "LED traffic light as a communications device," *Proceedings 199 IEEE/IEEJ/JSAI International Conference on Intelligent Transportation Systems (Cat. No.99TH8383)*, Tokyo, Japan, 1999, pp. 788-793. doi: 10.1109/ITSC.1999.821161

[3] M. Akanegawa, Y. Tanaka and M. Nakagawa, "Basic study on traffic information system using LED traffic lights," in *IEEE Transactions on Intelligent Transportation Systems*, vol. 2, no. 4, pp. 197-203, Dec. 2001. doi: 10.1109/6979.969365

[4] R. Bian, I. Tavakkolnia and H. Haas, "15.73 Gb/s Visible Light Communication With Off-the-Shelf LEDs," in *Journal of Lightwave Technology*, vol. 37, no. 10, pp. 2418-2424, 15 May15, 2019. doi: 10.1109/JLT.2019.2906464

[5] T. Huang, W. Yang, J. Wu, J. Ma, X. Zhang and D. Zhang, "A Survey on Green 6G Network: Architecture and Technologies," in *IEEE Access*, vol. 7, pp. 175758-175768, 2019. doi: 10.1109/ACCESS.2019.2957648

[6] A. Căilean and M. Dimian, "Current Challenges for Visible Light Communications Usage in Vehicle Applications: A Survey," in *IEEE Communications Surveys & Tutorials*, vol. 19, no. 4, pp. 2681-2703, Fourthquarter 2017. doi: 10.1109/COMST.2017.2706940.

[7] H.-K. Kim, J. H. Park and H.-Y. Jung, "An Efficient Color Space for Deep-Learning Based Traffic Light Recognition," in *Journal of Advanced Transportation*, Art. 2365414, 2018. doi: 10.1155/2018/2365414

[8] P. Das, S. Park, and P. Bhavsar, "Simulation-Based Framework for Estimating Crash Modification Factors (CMFs): A Case Study for ITS Countermeasures," in *Journal of Advanced Transportation*, Art. 1980363, 2019. doi: 10.1155/2019/1980363

[9] X. Wang, J. Li, C. Zhang and T. Z. Qiu, "Active Warning System for Highway-Rail Grade Crossings Using Connected Vehicle Technologies," in *Journal of Advanced Transportation*, Art. 3219387, 2019. doi: 10.1155/2019/3219387

[10] S. Avătămăniţei, A. Căilean, E. Zadobrischi, A. Done, M. Dimian and V. Popa, "Intensive Testing of Infrastructure-to-Vehicle Visible Light Communications in Real Outdoor Scenario: Evaluation of a 50 meters link in Direct Sun Exposure," *2019 Global LIFI Congress (GLC)*, Paris, France, 2019, pp. 1-5. doi: 10.1109/GLC.2019.8864129

[11] S.A. Avătămăniţei, A.M. Căilean, A. Done, M. Dimian, M. Prelipceanu, "Noise Resilient Outdoor Traffic Light Visible Light Communications System Based on Logarithmic Transimpedance Circuit: Experimental Demonstration of a 50 m Reliable Link in Direct Sun Exposure." *Sensors*, vol. 20, no. 3, pp. 909, 2020. doi: 10.3390/s20030909

[12] W. Shen and H. Tsai, "Testing vehicle-to-vehicle visible light communications in real-world driving scenarios," *2017 IEEE Vehicular Networking Conference (VNC)*, Torino, 2017, pp. 187-194. doi: 10.1109/VNC.2017.8275596

[13] B. Béchadergue, L. Chassagne and H. Guan, "Simultaneous Visible Light Communication and Distance Measurement Based on the Automotive Lighting," in *IEEE Transactions on Intelligent Vehicles*, vol. 4, no. 4, pp. 532-547, Dec. 2019. doi: 10.1109/TIV.2019.2938087

[14] R.W. Zaki, H.A. Fayed, A. Abd El Aziz, M.H.Aly, "Outdoor Visible Light Communication in Intelligent Transportation Systems: Impact of Snow and Rain," *Applied Sciences,* vol. *9*, 5453, 2019. 10.3390/app9245453

[15] M. S. Islim *et al*., "The Impact of Solar Irradiance on Visible Light Communications," in *Journal of Lightwave Technology*, vol. 36, no. 12, pp. 2376-2386, 15 June15, 2018. doi: 10.1109/JLT.2018.2813396

[16] H. B. Eldeeb and M. Uysal, "Vehicle-to-Vehicle Visible Light Communication: How to select receiver locations for optimal performance?," *2019 11th International Conference on Electrical and Electronics Engineering (ELECO)*, Bursa, Turkey, 2019, pp. 402-405. doi: 10.23919/ELECO47770.2019.8990598

[17] A. Cailean and M. Dimian, "Impact of IEEE 802.15.7 Standard on Visible Light Communications Usage in Automotive Applications," in IEEE Communications Magazine, vol. 55, no. 4, pp. 169-175, April 2017. doi: 10.1109/MCOM.2017.1600206

[18] S. Jaktheerangkoon, Kulit Na Nakorn, and K. Rojviboonchai, "Blind Corner Propagation Model for IEEE 802.11p Communication in Network Simulators," in *Journal of Advanced Transportation*, Art. 9482325, 2018. doi: 10.1155/2018/9482325

[19] R. Duo, C. Wu, T. Yoshinaga, J. Zhang, Y. Ji, "SDN-based Handover Scheme in Cellular/IEEE 802.11p Hybrid Vehicular Networks," *Sensors*, vol. *20*, pg. 1082, 2020. doi: 10.3390/s20041082

[20] M.A. Al-Absi, A.A. Al-Absi, H.J. Lee, "Performance Enriching Channel Allocation Algorithm for Vehicle-to-Vehicle City, Highway and Rural Network," *Sensors*, vol. 19, pg. 3283, 2019.

[21] S. Rajagopal, R. D. Roberts and S. Lim, "IEEE 802.15.7 visible light communication: modulation schemes and dimming support," in *IEEE Communications Magazine*, vol. 50, no. 3, pp. 72-82, March 2012. doi: 10.1109/MCOM.2012.6163585

[22] A. Cailean, B. Cagneau, L. Chassagne, S. Topsu, Y. Alayli and J. Blosseville, "Visible light communications: Application to cooperation between vehicles and road infrastructures," *2012 IEEE Intelligent Vehicles Symposium*, Alcala de Henares, 2012, pp. 1055-1059. doi: 10.1109/IVS.2012.6232225

[23] A. Căilean and M. Dimian, "Toward Environmental-Adaptive Visible Light Communications Receivers for Automotive Applications: A Review," in *IEEE Sensors Journal*, vol. 16, no. 9, pp. 2803-2811, May1, 2016. doi: 10.1109/JSEN.2016.2529019

[24] M. S. Islim *et al*., "The Impact of Solar Irradiance on Visible Light Communications," in *Journal of Lightwave Technology*, vol. 36, no. 12, pp. 2376-2386, 15 June15, 2018. doi: 10.1109/JLT.2018.2813396